JAW CRUSHER BB-NGR5-M

PRODUCT DATASHEET

ROBUST AND RELIABLE CRUSHING

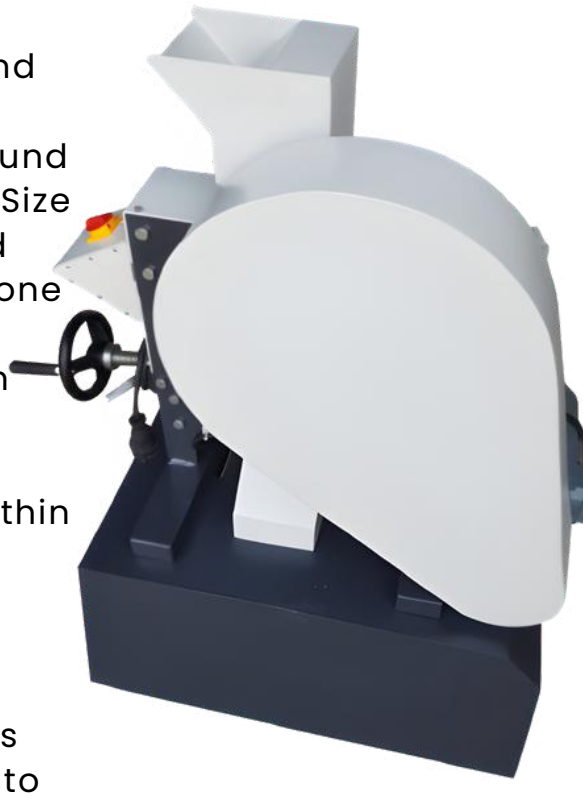

The Jaw Crusher BB-NGR5-M is a robust and powerful manual forced-feed crusher. The feed material passes through the no-rebound hopper and enters the crushing chamber. Size reduction takes place in the wedgeshaped area between the fixed crushing arm and one moved by an eccentric drive shaft. The elliptical motion crushes the sample which then falls under gravity. As soon as the sample is smaller than the discharge gap width, it falls into a removable collector within the jaw crusher. The continuous gap width setting with scale ensures optimum size reduction in accordance with the set gap width. BB-NGR5-M is suitable for many typical crushing tasks. It accepts feed sizes up to 90mm and crusher chamber is easy to clean Depending on the sample material, particle sizes down to 0,2 mm can be obtained. This jaw crusher is ideally suited for preliminary crushing of construction materials, ores, granite, oxide ceramics, quartz, slag, silicon, coal, tungsten alloys, cement clinker, etc.

A A e	A
A AA AA I MGG I GGG I RRG	A 1 1MG
1PI R	
PUG 1RG1	A 1
A A 1S1 1 1U1	
A	A 1
	1
A 1 1 1	1
1 1 1 1	1 1
	1
A 1VG	A 1
	1
A GM	